Item#	Part Code	Description
1	BH6FC1000-01	LEG SCREW-M6×105mm
2	BH6FC1000-02	FRONT WHEEL WITH SCREW
3	BH6FC1000-03	SMALL MIDDLE WHEEL WITH SCREW
4	BH6FC1000-04	LEG PIN-COMPLETE
5	BH6FC1000-05	LIFTING ARM PIN-COMPLETE
6	BH6FC1000-06	REAR WHEEL-COMPLETE
7	BH6FC1000-07	PUSHING HANDLE SLEEVE
8	BH6FC1000-08	LIFTING ARM HOOK-COMPLETE
9	BH6FC1000-09	PUMPING HANDLE-COMPLETE
10	BH6FC1000-10	1T CRANE PUMP WITH SWIVEL BASE
11	BH6FC1000-11	1T CRANE TUBE PLASTIC CAPS SET (3)

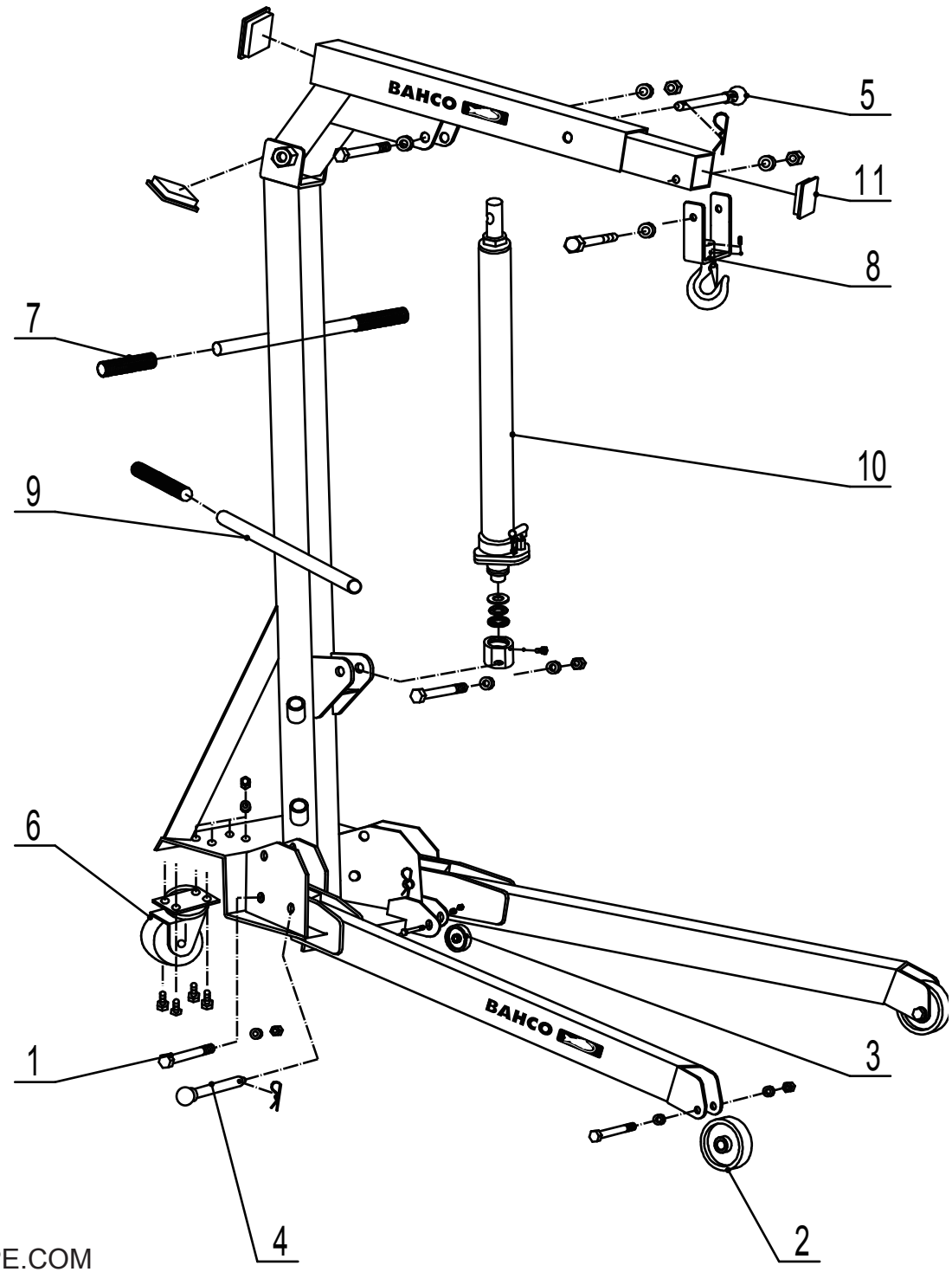

BH6FC1000

WWW.SNAEUROPE.COM