CT-H7
Assembly instructions

1

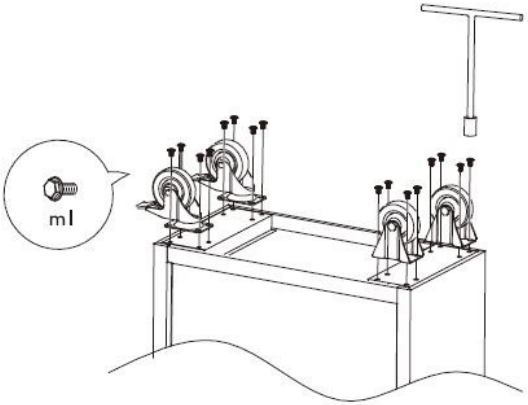

2

⚠ Notice

1. Screwing the bolt on the cart's four vertical support bars (cart legs) loosely.
2. To check the tool cart's alignment on a flat horizontal surface. After readjustment and checking, tighten the screws.

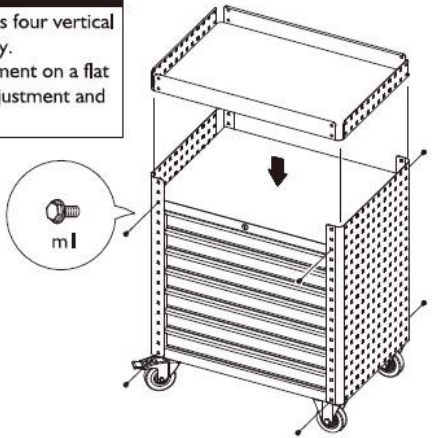

Screw pack

m1	m2
x 42	x 16

Tools needed

3

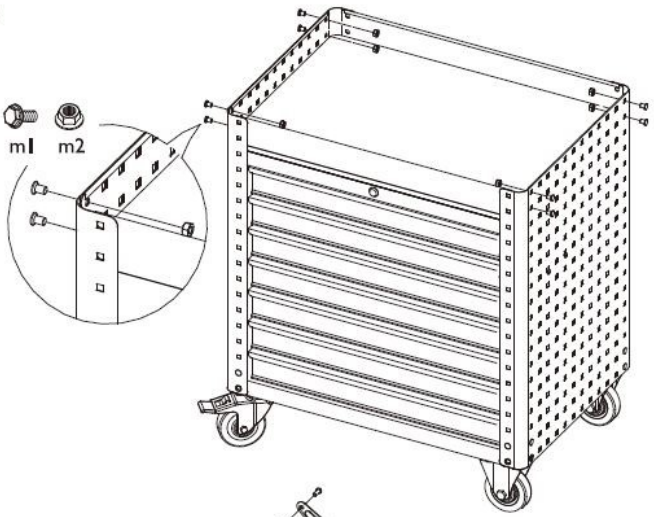

4

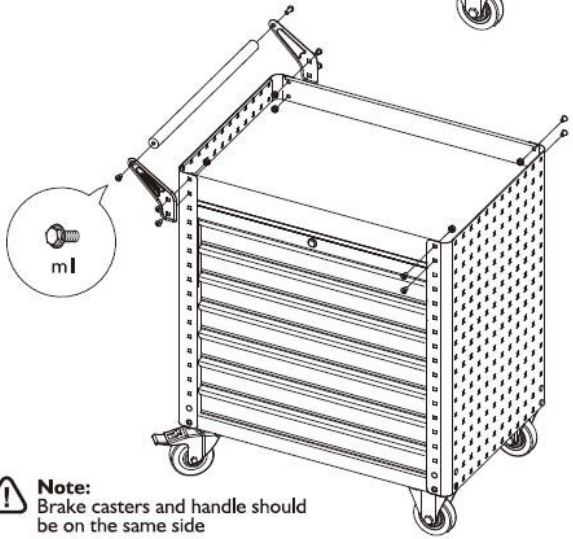

⚠ **Note:**
Brake casters and handle should be on the same side