THIS COPY IS PROVIDED ON A RESTRICTED BASIS AND IS NOT TO BE USED IN ANY WAY DETRIMENTAL TO THE INTERESTS OF PANDUIT CORP.

PANDUIT PART #	STUD SIZE		DIMENSIONS in. [mm]				
	ENGLISH	METRIC	L ± .03 [0,8]	W ± .01 [0,3]	C ± .02 [0,5]	M ± .03 [0,8]	H ± .01 [0,3]
EV10-6RB	#6	M3	1.05 [26,7]	.31 [7,9]	.31 [7,9]	.89 [22,6]	.15 [3,8]
EV10-8RB	#8	M4	1.05 [26,7]	.31 [7,9]	.31 [7,9]	.89 [22,6]	.17 [4,3]
EV10-10RB	#10	M5	1.05 [26,7]	.31 [7,9]	.31 [7,9]	.89 [22,6]	.20 [5,1]
EV10-14RB	1/4"	M6	1.23 [31,2]	.52 [13,2]	.38 [9,7]	.97 [24,6]	.27 [6,9]
EV10-56RB	5/16"	M8	1.23 [31,2]	.52 [13,2]	.38 [9,7]	.97 [24,6]	.33 [8,4]
EV10-38RB	3/8"	M10	1.31 [33,3]	.58 [14,7]	.41 [10,4]	1.02 [25,9]	.39 [9,9]

*RATED 300V, 75°C WITH CT-100A

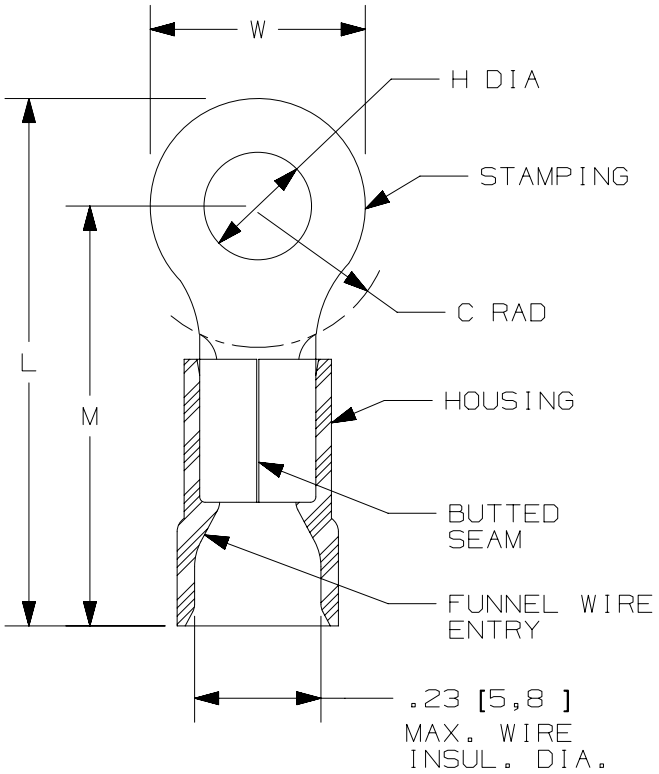

NOTES:
1. USED FOR:
   A. #12-10 AWG [4,0-6,0 mm²] STRANDED COPPER WIRE
   B. 221°F [105°C] MAX. OPERATING TEMPERATURE
   C. 600V. MAX. BLDG WIRE
      (1000 V. MAX. IN SIGNS, FIXTURES & LUMINAIRES)

2. MATERIAL:
   A. STAMPING: .04" [1,0] THK COPPER, TIN PLATED
   B. HOUSING: VINYL, YELLOW

3. INSTALLATION TOOLS PANDUIT APPROVED:
   A. UL APPROVED: CT-100A*, CT-600-A (CT-550CH)
      CT-1550, CT-1551, CT-2500(CT-2550CH)
   B. PANDUIT APPROVED: CT-160, CT-260, CT-460

4. WIRE STRIP LENGTH: 5/16" $^{+1/32}_{-0}$ [7,9mm $^{+0,8}_{-0}$]

5. SEE www.panduit.com FOR PACKAGE QUANTITIES INDICATED BY PART NUMBER SUFFIX
6. DIMENSIONS IN BRACKETS ARE METRIC EQUIVALENT

LISTED 587H E52164

CERTIFIED LR31212

REV	DATE	BY	CHK	APR	DESCRIPTION	ECN
00	2/18	JHNU	TMR	RGB	RELEASED	00123SH

TITLE
STRONGHOLD RING TERMINALS
VINYL INSULATED, BUTTED SEAM #12-10 AWG
CUSTOMER DRAWING

ITEM REVISION NAME: 00123STF/00

DATASET FILE NAME: 00123STF_DC/00

PANDUIT™

UNLESS OTHERWISE SPECIFIED, DIMENSIONAL TOLERANCES ARE: IN [mm]
.X ± .1 [2.54] .XXX ± .005 [.13]
.XX ± .01 [.25] ANGLES ± 5 °
THIRD ANGLE PROJECTION

MATERIAL: SEE NOTES

DRAWING NUMBER: SH41187

DRAWN BY	DATE	CHK	SCALE		SIZE
JHNU	2/18	TMR	N.T.S.	SHEET 1 OF 1	A

D10100DA/12