1	⁷ ى	SPCC t0.8	1
2	⁷ ▪ ◓ ⁱ ⁱ ⅝	SPCC t0.8	1
3	⁷ ▪ ◓ ⁱ ⁱ ⅝	SPCC t0.8	1
4	⁷	SPCC t0.8	5
5	⁷ ⇔( )	SPCC t0.8	2

ﻭ

. 1220 × 615 × 1805

. ⁷ ⁷ 128 δ

. ⁷ ⁷ ω ¡ ⊢ fi ﻧ

. ♬ ⁺ ↄ ◓ ⁻ ↄ

. ⁷ ⁷ ◦ ⁱ fi ♭ ↄ ⌐ ≡ — ﻧ ﻳ ○ fi ♯ ◖

⁷ ⁷ ⁷ ⁷ ⁷ ⁷ ⁷ ◦ ◐ ◦ ∀ -2000 ﺋﻮ ○ ↄ ﻟ ﻳ ℙ ◓

. ↕

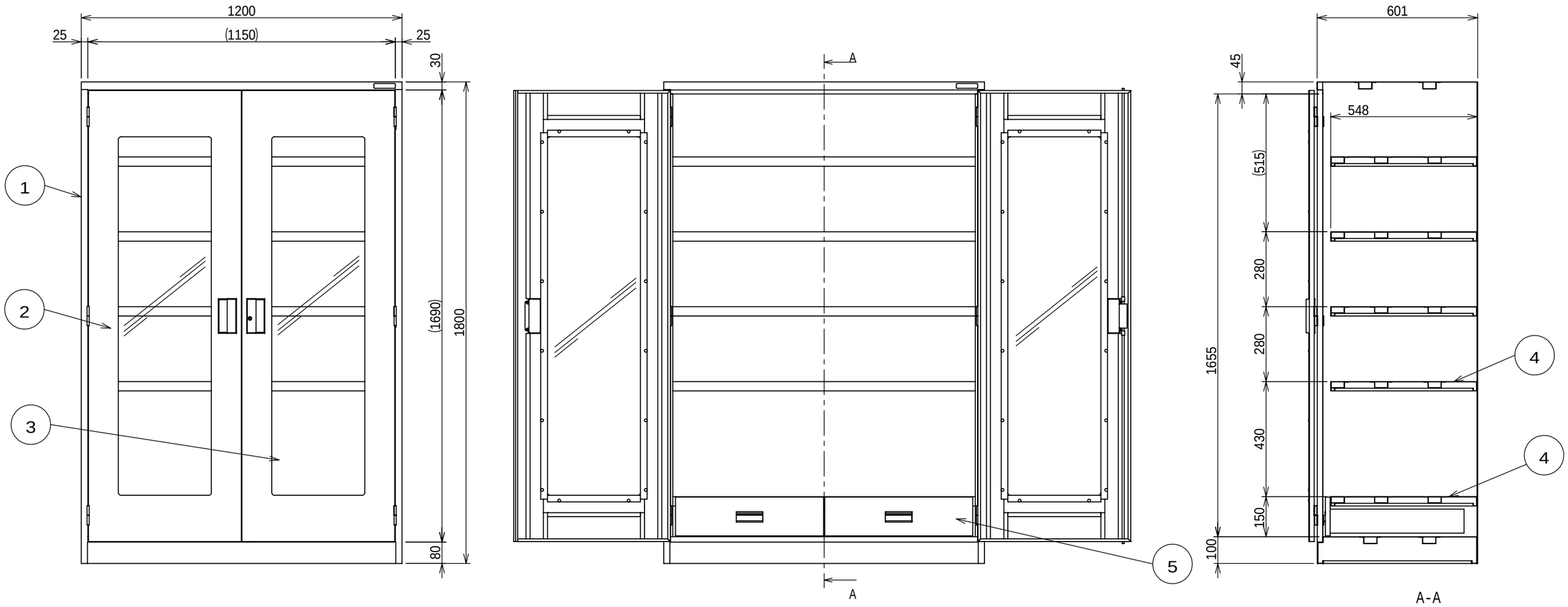

ﻷ 2023/08/30		TRUSCO トラスコ中山株式会社	☻ ↄ R ↄ Z ⁄ ↄ ◖ ⁻¹ ⁄ ⅟ ℙ ⅃	SHC-604M2LA